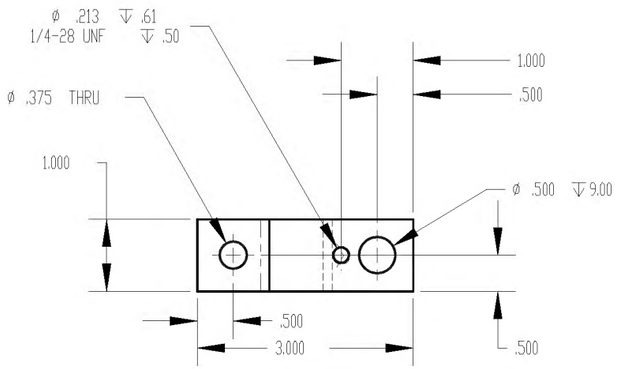

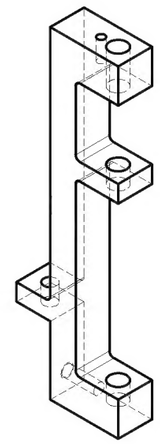

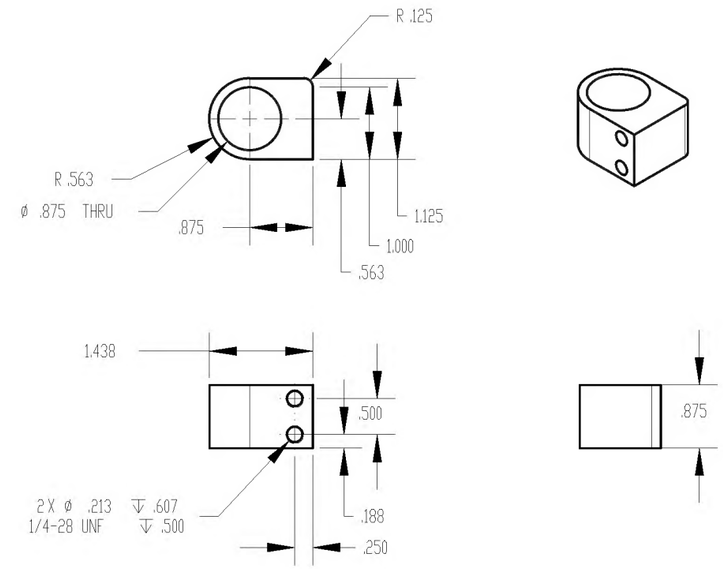

-4 SLIDER PLUG

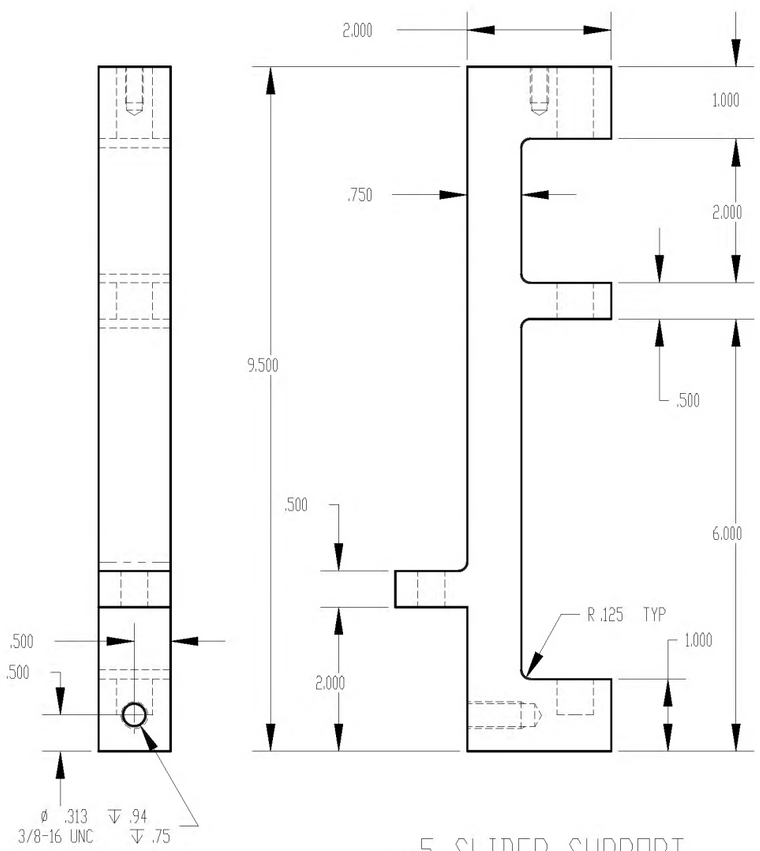

-5 SLIDER SUPPORT

SIZE	CAGE CODE	DWG. NO.	REV.
B	7W206	C00T3005	PR1
SCALE 1:2			SHEET 2 OF 4